A Brand New Game:

Video Game Patent Litigation Moves Beyond Base Technologies

David L. McCombs, Andrew S. Ehmke, and Ryan G. Moshell

HAYNES AND BOONE, LLP

January 15, 2009

David L. McCombs
214.651.5533
David.McCombs@haynesboone.com

Andrew S. Ehmke
214.651.5116
Andy.Ehmke@haynesboone.com

Ryan G. Moshell
214.651.5474
Ryan.Moshell@haynesboone.com

HAYNES AND BOONE, LLP
2323 Victory Avenue, Suite 700
Dallas, Texas 75219
T: + 1 214.651.5000
F: + 1 214.651.5940

A Brand New Game:
Video Game Patent Litigation Moves Beyond Base Technologies*

David L. McCombs, Andrew S. Ehmke, and Ryan G. Moshell

As gamers clamor for cutting edge innovation, game and console developers continue to conquer new creative frontiers and in the process spend significant sums to advance their next great creation. The latest generation of gaming consoles and online/virtual gameplay demand the use of new technologies to enhance the gaming experience and be competitive. Reflective of the growth in technology development for digital game applications is a rise in patent lawsuits over technical innovations pertinent to game development. Legal deathmatches are being waged over patents covering everything from console architectures to controller schemes to virtual world content.

I. Its All About Control

The most prevalent examples of such lawsuits involve game controllers.[1] Perhaps the most involved controller technology case is *Immersion Corporation v. Sony Computer Entertainment, Inc.*, which began in February 2002 in the Northern District of California and was not resolved until March 2007. The suit revolved around haptic technology, which provides force feedback in response to simulated interactions of forces. When incorporated into game controllers, haptics are used to provide vibration, or "rumble," to indicate, for example, character or object movement and collisions and explosions occurring within gameplay.

Immersion claimed that certain of Sony's PlayStation 2 controllers and Microsoft's Xbox controllers infringed multiple claims of a pair of Immersion's haptic technology patents. In August 2003, Microsoft paid Immersion $26 million for a 10% stake in Immersion and dismissal of the claims against Microsoft, leaving Sony as the sole defendant. Sony chose to fight on, and in September 2004 was hit with an infringement damages award of $82 million. After unsuccessfully challenging the infringement [2]verdict and damages award at the district court level and commencing an appeal in the Federal Circuit Court of Appeals, Sony finally agreed to a March 2007 settlement under which it agreed to pay the

* © 2009 David L. McCombs, Andrew S. Ehmke, and Ryan G. Moshell, Haynes and Boone, LLP. All Rights Reserved. This paper presents information about recent legal precedents and is intended to spur thoughtful consideration of their impact on the practice of law. This paper does not necessarily reflect the views of the authors, Haynes and Boone, or any former or present clients.

[1] One commentator, Mike Fahey of the game and console news website *kohaku.com*, has dubbed new controller designs "lawsuit magnets."

damages award (plus interest) in addition to ongoing licensing payments through the end of 2009. In total, Sony is estimated to have paid more than $150 million in connection with its use of the disputed haptic technology in its game controllers.

While battling with Immersion in court, Sony had also been chugging away on development of its next generation gaming console, the PlayStation 3. In light of the Immersion complaint, Sony made the decision to forego the use of haptic technology in PlayStation 3 controllers, instead substituting a six-axis "tilt sensor" that allowed the orientation of the controller to play a part in the control scheme of games. This move drew the ire of gamers who had come to consider force feedback to be a mainstay of video gaming. Although Sony had made every effort to dismiss the omission of haptic technology as a reflection of "next-gen" gaming trends, it immediately set about reincorporating force feedback into its controllers once the settlement with Immersion was announced in early 2007.

Several other lawsuits based on controller technologies followed and, although none of them were as prolonged or dramatic as *Immersion*, their subject matter confirmed that the big-time console developers were now on every alleged joystick innovator's hit-list. In July 2006, while Sony continued to battle with Immersion, Nintendo and Microsoft were sued by Anascape Ltd. Sony, it is worth noting, was never named as a defendant in the lawsuit, despite its controller technology being on-par with Nintendo's and Microsoft's. The omission fueled speculation that, having grown weary and wary of such actions following the Immersion debacle, Sony obtained a license from Anascape before the threat of a complaint could be raised.

Anascape asserted twelve patents covering several different aspects of analog joysticks, controller buttons and force feedback. Microsoft, again displaying a preference for avoiding trial, settled for an undisclosed amount on the eve of trial; Nintendo, however, was found liable for infringement in May 2008 and ordered to pay Anascape $21 million based on sales of certain GameCube and Wii controllers found to incorporate the disputed technology. Nintendo's bid for a new trial was rejected the following month and the company is currently gearing up for a Federal Circuit appeal.

In the meantime, Nintendo faces the imposition of a ban on importation of the offending controllers into the United States. Fortunately for Nintendo, the company has already discontinued its GameCube (Nintendo's previous generation of console) products and the jury determined that Nintendo's latest controllers (the Wii Remote and Nunchuk controllers) do not infringe Anascape's patents. However, the company has also designed a segment of Wii games specifically for use with Nintendo's Classic Controller, meaning that a portion of Nintendo's gaming library could be rendered unusable if the appeal is not successful.

Another controller-based patent infringement claim was filed six months later by Fenner Investments, Inc. against Nintendo, Microsoft and Sony in the Eastern District of Texas. Fenner claims

rights to analog joystick technology that allows for use of a lower-voltage joystick port interface for game controllers, the goal of which is to allow traditional controller circuitry to interface with next-gen gaming consoles that utilize a lower-voltage integrated circuit. Within the gaming community, news of the filing drew both an immediate collective groan and comparisons to the Immersion and Anascape actions, as gamers engaged in widespread online condemnation of both this action and the practice of "patent trolling."

Those who may have been hoping to see one of the "Big Three" (Microsoft, Sony and Nintendo) strike back got their wish (to an extent) in June 2008, when Nintendo sued Nyko Technologies, Inc., which specializes in the development and sale of accessories for gaming consoles. Following the November 2006 release of Nintendo's Wii gaming console, the control scheme of which can incorporate a second hand-held controller known as the "Nunchuk" (below, left), Nyko released its comparable "Nunchuck" controller (note the slight alteration in spelling) (below, right).

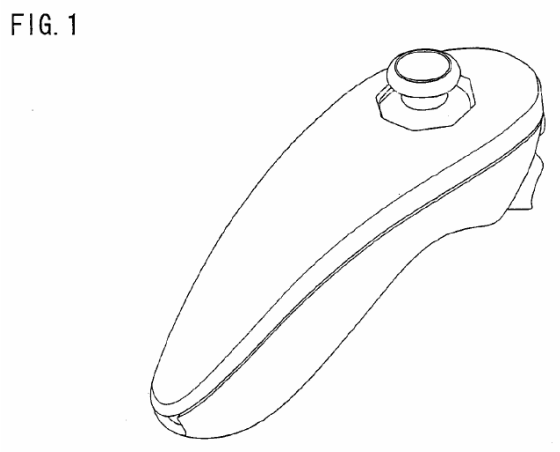

Nintendo Wii "Nunchuk" controller
(Fig. 1 of U.S. Pat. No. D556,201)

Nyko "Wireless Nunchuck" controller

While the Nintendo Nunchuk controller remained tethered to the accompanying controller and the Nyko Nunchuck was wireless, the two controllers were otherwise very similar in appearance. In addition to alleging trademark infringement (based on the similarities between the controller names), Nintendo asserted a pair of design patents that allegedly covered the Nunchuk's physical appearance. In December 2008, Nintendo dismissed its claims after Nyko agreed to market a redesigned and less streamlined controller as the "Kama" controller (below).

Redesigned Nyko "Kama"

However much the gaming community may have enjoyed seeing one of the Big Three swing back, it was back to business as usual in the Eastern District of Texas in November 2008, when Motiva LLC, a small, Ohio-based technology company, filed a lawsuit against Nintendo, alleging that Nintendo's Wii Remote controller infringes a Motiva patent. The patent being asserted, U.S. Pat. No. 7,292,151 to Ferguson, et al., addresses a "human movement measurement system" that tracks movement (via transponder(s)) by a user and communicates the movement to a processor that translates the movement to a visual output. Motiva's complaint is the most recent example of non-gaming-specific technology being alleged as the basis of a patent infringement claim against a video game developer. Despite a brief mention that the motion-capture system might be used to determine "competitive ranking" for applications having a "predominate point goal-oriented purpose," the patent states that the purpose of the system is "to train and assess functional movement capability" using centralized processors and one or more active transponders.[3]

One might ask, "Isn't a lawsuit based on non-gaming motion-sensing technology pushing the limits?" Hillcrest Laboratories, Inc., another company that has no ties to the game development industry,

[3] In connection with trade press in the case, an amusing quote was made by attorney W. Mark Lanier, who represents Motiva: "Using someone else's technology without permission is theft. Nintendo makes video games where you get to play a thief, but that doesn't give them the right to be one." As also noted, "It also doesn't give Nintendo the legal right to stomp turtles, assault Moblins or deliberately trick us about their gender by wearing asexual bounty hunter space suits." See, *Nintendo Sued For Patent Infringement (Yes, Again)*, by Michael McWhertor (November 11, 2008) available at http://kotaku.com/5083598/nintendo-sued-for-patent-infringement-yes-again.

certainly does not think so. Hillcrest's HōME on-screen interface utilizes visual directories for allowing access to digital content through the chosen display device (e.g., a television), while the company's Freespace application features a handheld input device that allows motion-controlled point-and-click navigation of and interaction with HōME. Despite its basis in a completely different market space, Hillcrest filed a District of Maryland lawsuit against Nintendo in August 2008. Hillcrest claims that the controller scheme and controller-console interface utilized by the Wii and the Wii Remote controller infringe on four patents covering Hillcrest's HōME and Freespace systems. Since Hillcrest filed a concurrent complaint with the United States International Trade Commission, the district court has stayed its own proceedings pending the Commission's determination of infringement. An ITC investigation has been approved and is pending.

Like the Motiva action, the Hillcrest lawsuit involves an attempt to transpose non-gaming-specific technology onto a successful gaming product. Unlike Motiva, however, Hillcrest is targeting not only the controller technology, but also the control scheme and the interactions between the controller and the console. In the case of the Wii, such an allegation strikes at the very core of system gameplay.

II. Music To My Ears

New controllers and controller schemes are not the only innovations to have been spawned litigation. 2005 saw the release of the first incarnation of "Guitar Hero," the now ubiquitous musical video game/simulator that utilizes a large, guitar-shaped controller that features "fret buttons" and a "strum bar" for gameplay. Numerous updates to the "Guitar Hero" series followed, as did the 2007 release of a competitor, "Rock Band," which overhauled the concert-as-video-game concept by adding a drum pad controller setup and microphone. With each subsequent addition to gameplay features, these musical applications further redefined the scope of console video gaming, as well as the role of controller technology in influencing gameplay dynamics.

These applications have also given rise to a rock opera that would make Immersion proud. Originally inspired by an arcade game called "Guitarfreaks" (created by Konami Corporation), Harmonix Music Systems began developing "Guitar Hero" and partnered with RedOctane, Inc., which produced the guitar controllers for the game. RedOctane was purchased by gaming giant Activision Inc. (now Activision Blizzard) in June 2006, while MTV Networks purchased Harmonix that September. Harmonix released an additional "Guitar Hero" title ("Guitar Hero Encore: Rocks the 80's") in July 2007 and then turned its attention toward development of "Rock Band," which would be released through Activision's rival publisher, Electronic Arts, Inc.

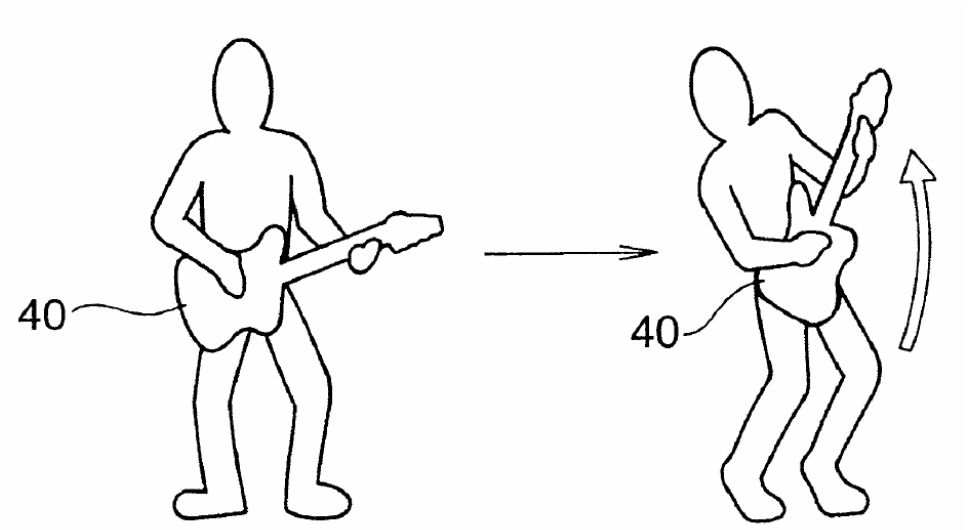

Fig. 7 of Konami's Pat. No. 6,390,923 illustrates guitar controller orientation during "wailing operation."

Surprisingly enough, however, as much as Activision and Electronic Arts have each kept a wary eye on the other over the last few years, the most significant litigation surrounding musical simulation games was not brought by either company. That honor goes to Gibson Guitar Corporation, famous producer of guitars and other music-related products, which claims that both "Guitar Hero" and "Rock Band" infringe U.S. Pat. No. 5,990,405 to Auten, et al., which issued in 1999. Gibson's patent purports to cover a three-dimensional system for generating and controlling a simulated musical concert using an actual instrument for the user's generation of audio input.

Following the success of "Guitar Hero" in 2006 and the release of "Rock Band" in 2007, Gibson contacted Activision and Electronic Arts and attempted to negotiate a license with each. When license discussions proved fruitless, Gibson began preparing to file suit against distributors of Activision's "Guitar Hero." Activision filed a preemptive declaratory action in the Central District of California in March 2008, seeking to prevent Gibson from prosecuting the anticipated lawsuit in its home state of Tennessee. Gibson filed in the Middle District of Tennessee, as expected, less than a week later and named retailers such as Wal-Mart Stores, Inc., Target Corporation, Kmart Corporation and Amazon.com, Inc. as defendants.

Three days after its first filing, Gibson struck again and filed a patent infringement lawsuit against Harmonix, MTV, Viacom International, Inc. (MTV's parent company) and Electronic Arts in the same district. In May 2008, Viacom requested and obtained a determination by the United States Patent and Trademark Office that Gibson's patent would be reexamined. Activision and Gibson continued their wrangling in California: Gibson being denied an injunction against Activision's games and Activision

being denied a stay of all litigation proceedings pending the outcome of the pending USPTO reexamination.

In August 2008, the Tennessee court in which both of Gibson's lawsuits had landed dismissed the suit against Harmonix and company in favor of consolidating it with the suit against Activision's retailers. Meanwhile, the California court conducted claim construction (so-called "Markman") proceedings to determine the appropriate interpretation of Gibson's patent claims.

During claim construction, Gibson proposed that "musical instrument" be interpreted to mean an apparatus that need only "indirectly produce music" and have the physical appearance of an actual musical instrument. Similarly, Gibson proposed that "instrument audio signal" be interpreted to include any signal that is "representative of the sounds intended to be made by operating the musical instrument." The court concluded in its adopted claim construction that the '405 patent "requires that a 'musical instrument' must be capable of (1) making 'musical sounds,' . . . ('musical sounds that would be made . . . by a specific musical instrument"); and (2) either directly, or indirectly through an interface device, producing an instrument audio signal representative of those sounds." The court further clarified that the patent requires, "in particular, that the instrument must be capable of making musical sounds independent of the mechanism that outputs the instrument audio signal." As for the meaning of "instrument audio signal," the court determined that the appropriate interpretation is "an electrical signal output by a musical instrument," effectively tethering the definition of "instrument audio signal" to that that of "musical instrument."

In August 2008, the Tennessee court stayed all claims against the Activision retailers pending resolution of Activision's California declaratory action regarding the "Guitar Hero" game. Viacom's motion to have all claims involving "Rock Band" stayed pending the USPTO's reexamination of Gibson's patent was denied, however, and the parties continue to work toward trial in that matter.

Regardless of the outcome in Gibson's lawsuits, other holders of patents that bear on music simulation and video games have apparently been emboldened. In July 2008, Konami Digital Entertainment Co. filed a patent infringement suit against Harmonix, MTV and Viacom in the Eastern District of Texas, alleging that three of Konami's patents are infringed by "Rock Band." The patents address: (i) dividing game play into different sections for different instruments and displaying instructional patterns (U.S. Pat. No. 6,590,923 to Yoshitomi, et al.); (ii) setting different difficulty modes by restricting the number of controller buttons utilized (U.S. Pat. No. 6,425,822 to Hayashida, et al.); and (iii) percussion controller timing and real-time feedback (U.S. Pat. No. 6,645,067 to Okita, et al.).

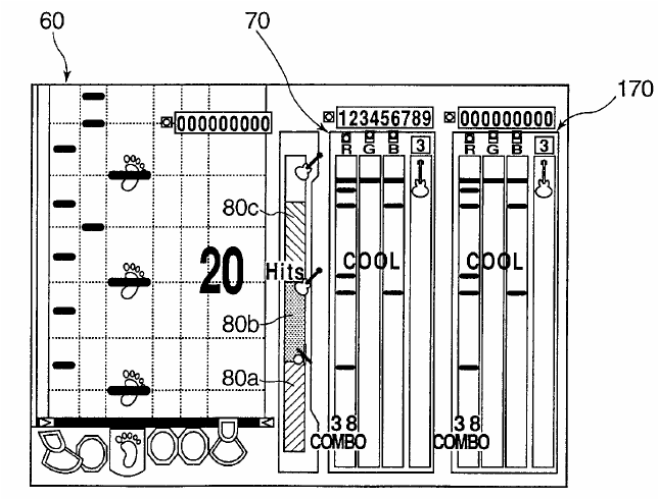

Fig. 10 of '923, showing divided game play.

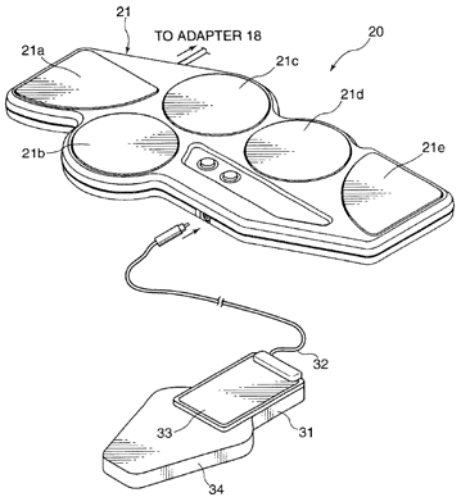

Fig. 2 of '923, showing percussion controller.

Konami's leap into the fracas is not without precedent, given that it sued Roxor Games in the Eastern District of Texas in 2006 over Roxor's practice of converting the hardware for Konami's hit "Dance-Dance-Revolution" arcade games for use with other applications. This latest move becomes even less surprising in light of Harmonix' prior involvement in the development of "Karaoke Revolution," which Konami began publishing in 2003. Predictably, Konami also claims that proprietary elements of "Karaoke Revolution" were incorporated into "Rock Band." The case is still in the early stages, with Markman proceedings scheduled for September 2009 to determine the appropriate interpretation of Konami's patent claims.

III. Take Me Places

While musical simulators might be the latest trend to inspire a slew of lawsuits, they certainly are not the first. Nintendo and Sony have each attracted their share of trouble over their respective portable gaming units. In November 2008, a jury in the Eastern District of Texas determined that Sony is liable for willful infringement of an Agere Systems patent. Agere had claimed that the reduced-power wireless local area network technology found in, among other Sony products, the popular PlayStation Portable (PSP) gaming unit was proprietary and had not been licensed. Damages? $18.5 million.

Not to be left out, Nintendo returned to the spotlight in May 2008, when it was sued in the Northern District of Illinois by an individual claiming to hold a patent that covers touchscreen technology similar to that used in the Nintendo DS portable gaming unit. What makes this case of particular interest is the plaintiff's filing of a similar suit against Apple in February 2008, alleging that his patent also covers the function of the navigation scheme of the iPod.

IV. I'll See You Online

As trends go, however, the latest to appear is the increased significance of networked gaming and community interaction. As developers release more games that are enabled to receive downloadable content (DLC) and massively multiplayer online role-playing games (MMORPGs) become increasingly popular, the ability for developers to transmit content to players and for players to communicate amongst themselves have become key. ADC Technology, Inc. took note of this fact and filed a patent infringement lawsuit against Microsoft, Nintendo and Sony in the Western District of Washington in October 2008, for their respective online communities and content gateways (Xbox Live, Virtual Console and the PlayStation Network). ADC claims that its five patents collectively address the remote distribution of software to terminal devices and, specifically, the execution of such distribution in response to software purchases.

ADC's suit is significant because it constitutes one of the first high-profile obstacles to game developers' increased offering of DLC. This content, which can be released both concurrently with and subsequent to release of the host game is expected to become a significant consideration in the design and marketing of games. Map packs for action games and songs/albums for karaoke and musical simulation games are examples of DLC that has come to be expected by gamers and can be used by developers to extend the viability of the original game.

Balthaser Online, Inc. took things a bit further in November 2008, suing a slew of companies from a variety of industries, including Electronic Arts and Capcom USA. Balthaser's patent, U.S. Pat No. 7,000,180, addresses a method of allowing for internet-based creation and editing of rich-media (e.g. interactive) applications for online use, and Balthaser claims that the patent covers the application of this method to social networking sites, virtual worlds and video games.

Balthaser, though, is the tip of the iceberg, as there appears to be no shortage of firms willing to assert patents relating to online communications and virtual spaces. Forterra Systems, Inc., a specialist in virtual world technologies, sued Forterra founder William Harvey in the Northern District of California in 2005. Harvey founded Forterra (then known as "There") in the late 1990's and is actually one of the inventors named in Forterra's asserted patent, which addresses delivery of communications in a three-dimensional virtual environment. The technology takes into consideration the location of the sender's avatar within a virtual space and renders the message graphically so that the recipient can visually ascertain the location of the sender's avatar. The parties settled the case in January 2008 under undisclosed terms, but the case has caused virtual world developers to wonder, "Who's next?"

The online and gaming communities didn't have to wait long to find out. Worlds.com, touting itself as pioneer in the 3D virtual community, announced in December 2008 that it intends to work with General Patent Corporation, a patent licensing and enforcement entity, to enforce Worlds.com's virtual

world patents. Claiming that it developed the communications techniques and methodologies widely used in today's virtual environments, Worlds.com stated its intention to target MMORPGs and other virtual world applications. True to its word, Worlds.com sued game developer NCSoft Corporation for patent infringement in the Eastern District of Texas at the end of December 2008, with General Patent Corp. representatives hinting that similar lawsuits are on the horizon.

V. Conclusion

The primary takeaway from the past few years of video game patent litigation is that, where there is creativity, there are patents, and the game industry is no exception. And as creativity translates in to revenue, litigation is certain. Video games and video game technology are certainly not child's play, and the competition in the courtroom has only just begun.